DEC-8L-H8AA-D

BA08
PERIPHERAL EXPANDER OPTION
FUNCTIONAL DESCRIPTION

DIGITAL EQUIPMENT CORPORATION ▫ MAYNARD, MASSACHUSETTS

1st Printing June 1969
2nd Printing (Rev) December 1969
3rd Printing March 1970

Copyright © 1969, 1970 by Digital Equipment Corporation.

The material in this manual is for information purposes and is subject to change without notice.

The following are trademarks of Digital Equipment Corporation, Maynard, Massachusetts:

DEC	PDP
FLIP CHIP	FOCAL
DIGITAL	COMPUTER LAB

BA08
PERIPHERAL EXPANDER

INTRODUCTION

The BA08 Peripheral Expander option (Figure 1) is used with the PDP-8/L Programmed Data Processor for installation of one or more of a group of PDP-8/L options that cannot be installed directly in the PDP-8/L.

DESCRIPTION

Physical

The BA08 is the same size as the PDP-8/L and is similar in appearance except for a blank front panel. A power switch is the only control on the BA08 front panel. Installation can be in the same rack with the PDP-8/L or, when table-top installation is used, a cover (Super Chassis Assembly) is available for the BA08.

A number of modules are required as part of the BA08. These modules are shown in bold relief in Figure 2 and are listed in Table 1.

The PDP-8/L options requiring the use of the BA08 are listed in Table 2. The types, quantities and locations of modules required for each of these options are also listed in this table.

The listed options can be installed in the BA08 at the same time, except where variations of a major option are mutually exclusive. For example, only one KW8/L Real-Time Clock option can be used at a time, and only one MC8/L Memory Extension option can be installed at a time. Similarly, the VC8/L and KV8/L option are mutually exclusive.

The BA08 provides interface connections to the PDP-8/L and power for the modules used the applicable options. A power supply identical to the power supply of the PDP-8/L is contained in the BA08.

Logic

The logic circuits of the BA08 are limited to bus driver circuits, inverters, loads, and diode clamps. Signal amplification for interfacing signals is provided by the bus driver circuits shown on engineering drawing D-MU-BA08-0-2. Descriptions of the logic circuits used by the various options that plug into the BA08 can be found in the Functional Descriptions for the respective options.

MAINTENANCE

Maintenance procedures pertaining to the PDP-8/L also apply to the BA08. When routine preventive maintenance procedures are performed for the PDP-8/L, the BA08 should be included in the procedures.

ENGINEERING DRAWINGS

The following drawings concerning the BA08 are included in this section.

Drawing Number	Title
D-IC-BA08-0-2	I/O Connectors BA08
D-MU-BA08-0-4	Module Utilization BA08
D-CS-M002-0-1	15 Loads
B-CS-M111-0-1	Inverter
C-CS-M623-0-1	Bus Driver
B-CS-M906-0-1	Cable Terminator
B-CS-M907-0-1	Diode Clamp

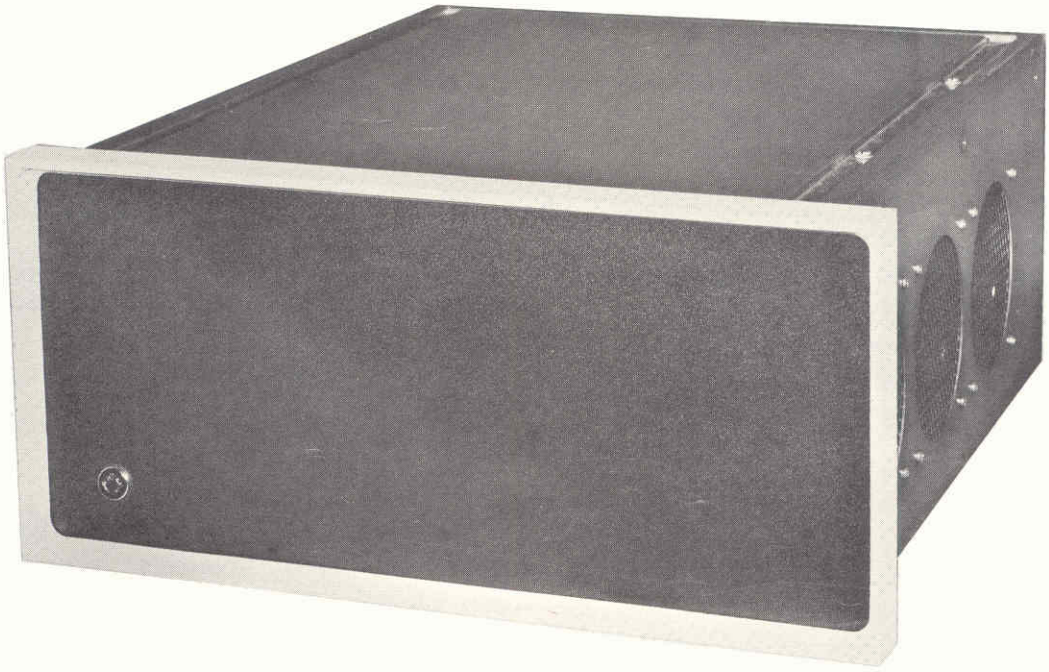

Figure 1 BA08 Peripheral Expander

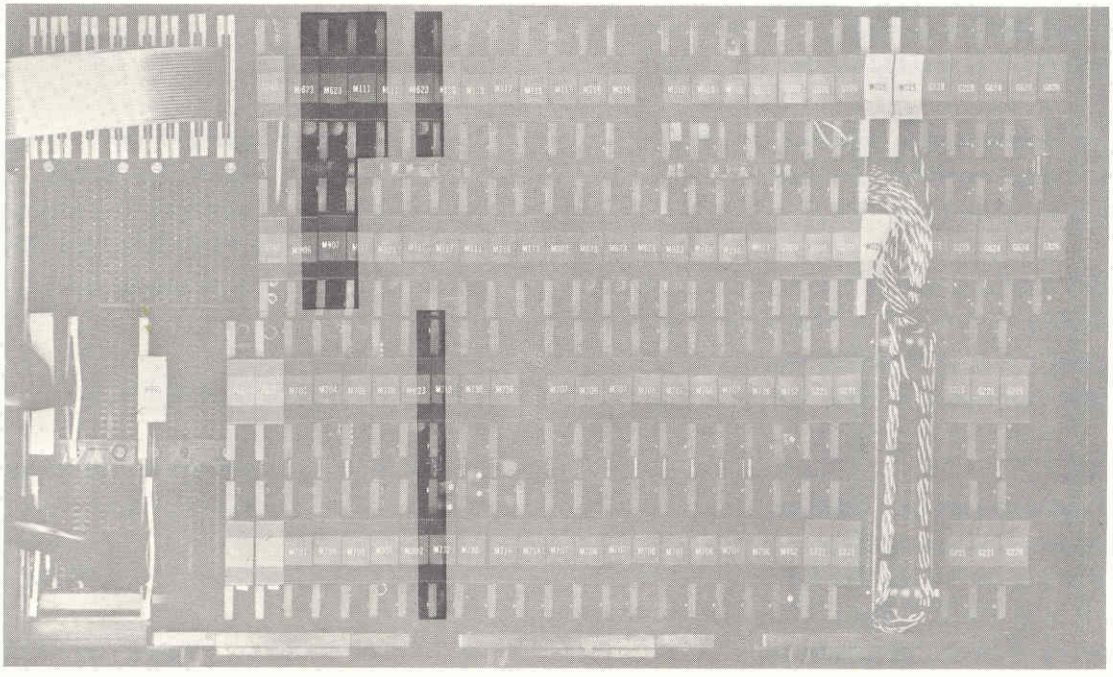

Figure 2 BA08 Modules

Table 1
BA08 Peripheral Expander Modules

Quantity	Module Type Number	Use	Location	
			Row	Slot
1	M002	15 Loads	D	23
1	M111	Inverter	A	25
4	M623	Bus Driver	A	23
			A	26
			A	27
			C	23
1	M906	Cable Terminator	B	27
1	M907	Diode Clamp	B	26

Table 2
List of Options and Control Logic Modules Used in the BA08

Option	Module	Use	Location	
			Row	Slot
CR8/L Card Reader and Control This option allows the PDP-8/L to read 12 row, 80 column punched cards at a nominal rate of 200 cards per minute.	M714 M716 W991	Control for CR Control for CR CR Cable Assembly	D C C D	20 19 32 32
DC02 Multiple Teletype Controls This option allows the PDP-8/L user to add from one to four Teletypewriters or other serial data stations. This option consists of a DC02-A Multiple Control and from one to four DC02-D Data Stations.				

Table 2 (Cont)

Option	Module		Location	
			Row	Slot
DC02-A Multiple Control				
The DC02-A selects each DC02-D Data Station and controls its operation. Its logic accepts input/output and station selection instructions from the PDP-8/L and returns DC02-D data and status information to the computer.	M002	15 Loads	B	18
	M111	Inverter	B	21
	M113	10 2-input NAND Gates	B	19
	M117	6 2-input NAND Gates	B	22
			B	23
			B	25
	M216	Six Flip-Flops	B	20
	M452	Variable Clock	C	10
			D	10
	M623	Bus Driver	B	24
DC02-D Data Station				
The DC02-D assembles serial data from an ASR 33 Teletype keyboard or perforated tape reader into parallel form for transmission to the Computer.	M623	Bus Driver	B	14
			B	15
			B	16
			B	17
	M706	Teletype Receiver	CD	11
			CD	13
			CD	15
			CD	17
	M707	Teletype Transmitter	CD	12
			CD	14
			CD	16
			CD	17
	W076	Teletype Connector	D	33
			D	34
			D	35
			D	36
KV8/LA Storage Tube Display Control Logic only (required for VT01 Storage Tube Display)				

Table 2 (Cont)

Option	Module		Location	
			Row	Slot
KW8/LA Real-Time Clock Fixed-Interval Line-Frequency This option allows the PDP-8/L to establish a reference time to be used to associate data with real time.	M501 M708	Schmitt Trigger Clock Control	D C	24 24
KW8/LB Real-Time Clock Fixed-Interval Variable-Frequency	M401 M708	Clock Clock Control	D C	24 24
KW8/LC Real-Time Clock Fixed-Interval Crystal-Frequency	M405 M708	Crystal Clock Clock Control	D C	24 24
KW8/LD Real-Time Clock Programable Interval Line-Frequency	M501 M708 M709	Schmitt Trigger Clock Control Clock Counter	D C CD	24 24 25
KW8/LE Real-Time Clock Programable Interval Variable-Frequency	M401 M708 M709	Clock Clock Control Clock Counter	D C CD	24 24 25
KW8/LF Real-Time Clock Programable Interval Crystal-Frequency	M405 M708 M709	Crystal Clock Clock Control Clock Counter	D C CD	24 24 36
MC8/LA Memory Extension Control and 4096 Words of Memory Without Memory Parity This option provides the PDP-8/L with an additional 4096 (4K) memory without parity.	G020*	Sense Amplifier	A A A B B B	8 9 10 8 9 10
	G221*	Memory Selector	C C C C D D D D	3 4 8 9 3 4 8 9

Table 2 (Cont)

Option	Module		Location	
			Row	Slot
MC8/LA (Cont)	G228*	Inhibit Driver		
			A	5
			B	4
			B	5
			C	2
			D	2
	G610*	A-Diode Board	CD	5
	G611*	B-Diode Board	CD	7
	G624	Resistor Board	A	2
			A	3
			B	2
			B	3
	G785*	Power Connector	AB	28
	G826*	Regulator Control	AB	1
	M111*	Inverter	A	24
			A	25
	M113*	10-2-Input NAND Gates	A	21
			A	22
			B	13
	M115*	8 3-Input NAND Gates	A	19
	M117*	6 4-Input NAND Gates	A	18
			A	20
	M216*	Six Flip-Flops	A	16
			A	17
			B	12
	M310*	Delay Line	A	13
			A	14
	M360*	Variable Delay	A	12
	M617*	6 4-Input NOR Buffer	B	11
	M903*	Cable Connector to	AB	29
		Central Processor	AB	30
			AB	31
	W025*	Cable Connector for	AB	6
		Memory Stack	AB	7
	30005256-1	12-Bit Memory Stack	CD	6

Table 2 (Cont)

Option	Module		Location	
			Row	Slot
MC8/LB Memory Extension Control and 4096 Words of Memory with Memory Parity This option provides the PDP-8/L with an additional 4096 (4K) memory with Parity.	G020 G228 30005256-1 *	Sense Amplifier Inhibit Driver 13-Bit Memory Stack The modules marked with an asterisk are also used in the MC8/LB in the same locations.	A A CD	11 4 6
VC8/LA Oscilloscope Display and Control This option allows the PDP-8/L to display and plot data on an oscilloscope Display.	A607 M701 W020	10-Bit D-A Converter Display Control Indicator Cable Connector	CD CD CD C	28 29 27 36
VC8/LB Oscilloscope Display Control (without display)	M701 W020	Display Control Indicator Cable Connector	CD C	27 36
VP8/L Incremental Plotter Control This option allows the PDP-8/L to plot and display data on an Incremental Recorder.	M023 M704	 Plotter Control	C CD	35 26

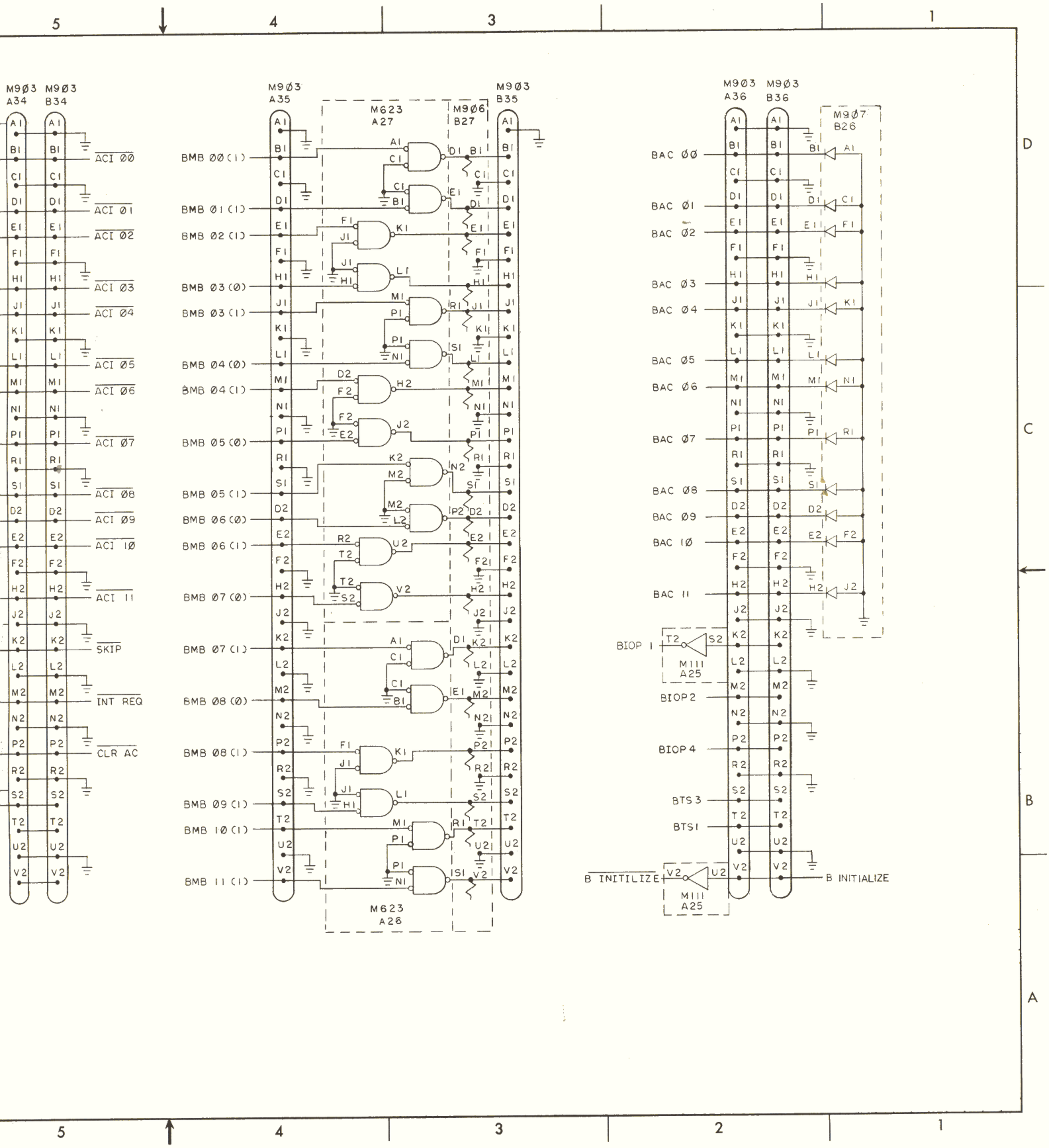

D-IC-BA08-0-2 I/O Connectors BA08

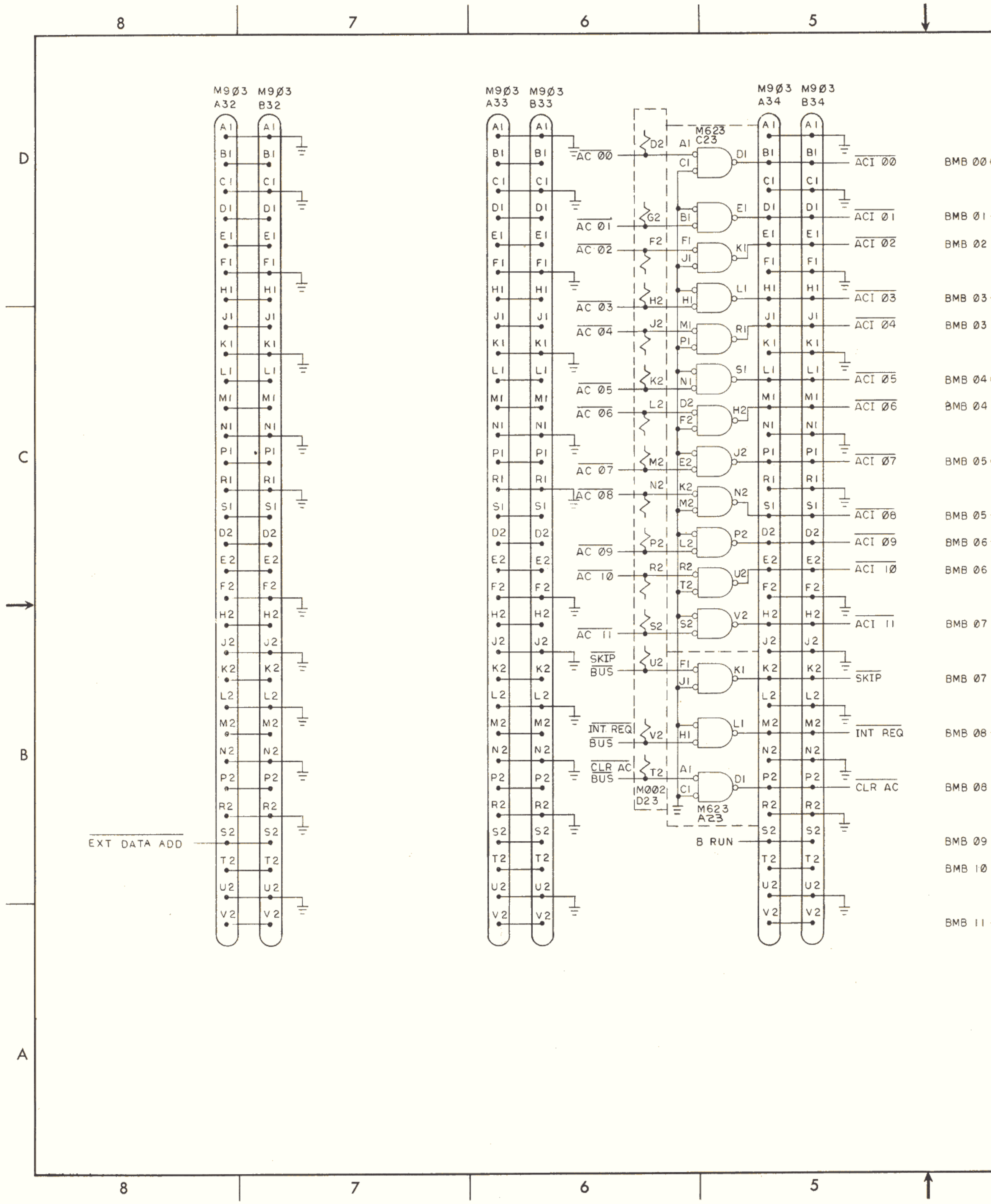
M9Ø3 A32
M9Ø3 B32
M9Ø3 A33
M9Ø3 B33
M9Ø3 A34
M9Ø3 B34
M623 C23
M623 A23
M002 D23
AC ØØ
AC Ø1
AC Ø2
AC Ø3
AC Ø4
AC Ø5
AC Ø6
AC Ø7
AC Ø8
AC Ø9
AC 1Ø
AC 11
SKIP BUS
INT. REQ BUS
CLR AC BUS
ACI ØØ
ACI Ø1
ACI Ø2
ACI Ø3
ACI Ø4
ACI Ø5
ACI Ø6
ACI Ø7
ACI Ø8
ACI Ø9
ACI 1Ø
ACI 11
SKIP
INT REQ
CLR AC
B RUN
EXT DATA ADD
BMB ØØ
BMB Ø1
BMB Ø2
BMB Ø3
BMB Ø3
BMB Ø4
BMB Ø4
BMB Ø5
BMB Ø5
BMB Ø6
BMB Ø6
BMB Ø7
BMB Ø7
BMB Ø8
BMB Ø8
BMB Ø9
BMB 1Ø
BMB 11

10	11	12	13	14	15	16	17	18	19	20	21	22
G020	* G020	M360	M310	M310		M216	M216	M117	M115	M117	M113	M113
MEM 04	MEM P	MEM DONE STROBE	CYC DONE	INHIBIT		IF	DF	EA'	EA	EA	LOAD LB EA	SET DF
						IB	SFO	$\overline{INT}$ $\overline{INHIB}$		CDF	$\overline{SET\ IB}$ $\overline{IF}$	
				WRITE		SFI	BF			-CIF	$\overline{INT}$ $\overline{INHIBIT}$	EA
MEM 05											EA	
												SFO
G020	M617	M216	M113	M623	M623	M623	M623	M002	M113	M216	M111	M117
MEM 10	B MEM ENABLE	MEM ENABLE	EMA	ACI 11	ACI11	ACI 11	$\overline{ACI\ 11}$	D2	$\overline{INT\ RQ}$	STØ	PSEL	$\overline{IOT\ 6123}$
		CYCLE	CYC DONE	ACI 05	ACI 05	ACI 05	ACI 05	E2	$\overline{INT\ RQ}$	ST1	XIX	IOT 6123
				ACI 19	ACI 10	ACI 10	$\overline{ACI\ 10}$	F2	$\overline{INT\ RQ}$		INT ON	IOT 6113
	CYC DONE	READ	INHIBIT	ACI 04	ACI 04	ACI 04	ACI 04	H2	$\overline{INT\ RQ}$	ST2	X2X	IOT 6125
			MEM DONE	ACI 09	ACI 09	ACI 09	$\overline{ACI\ 09}$	J2	$\overline{INT\ RQ}$	ST3	IOT 6123	IOT 6115
				ACI 08	ACI 08	ACI 08	$\overline{ACI\ 08}$	K2	$\overline{INT\ RQ}$		IOT 6125	INITIALIZE UNIT
MEM BEGIN	BEMA	WRITE	LOCK	ACI 07	ACI 07	ACI 07	$\overline{ACI\ 07}$	L2	$\overline{INT\ RQ}$	INT ON	IOT 6127	IOT 6127
				ACI 03	ACI 02	ACI 02	ACI 01	M2	$\overline{INT\ RQ}$			IOT 6117
MEM 11			MEM ENABLE	C.P. CLEAR	ACI 06	ACI 06	ACI 06		$\overline{INT\ RQ}$	XIX	IOT 6117	CLR AC

32	33	34	35	36	37	38	39	40	41	42	43	44
M903 CABLE	M903 CABLE	M903 CABLE	M903 CABLE	M903 CABLE								
BREAK DATA IN	BREAK DATA ADDRESS	ACI 00 TO ACI 08	BMB 00 (1) TO BMB 05 (1)	BAC 00 TO BAC 08	BAC 09 TO $\overline{B\ INITIALIZE}$							
EXT DATA ADD		$\overline{ACI\ 09}$ TO $\overline{ACI\ 11}$	BMB 06 (0) TO BMB 11 (1)									
		$\overline{SKIP}$ $\overline{INT\ REQ}$ $\overline{CLR\ AC}$ B RUN										

* FOR PARITY OPTION MC8LB ADD (1) GØ2Ø
(1) G228 TO MC8L REQUIREMENT
AND CHANGE FROM 12 TO 13
BIT MEMORY STACK - SEE PART LIST

D-MU-BA08-0-4 Module Utilization BA08
Sheet 1

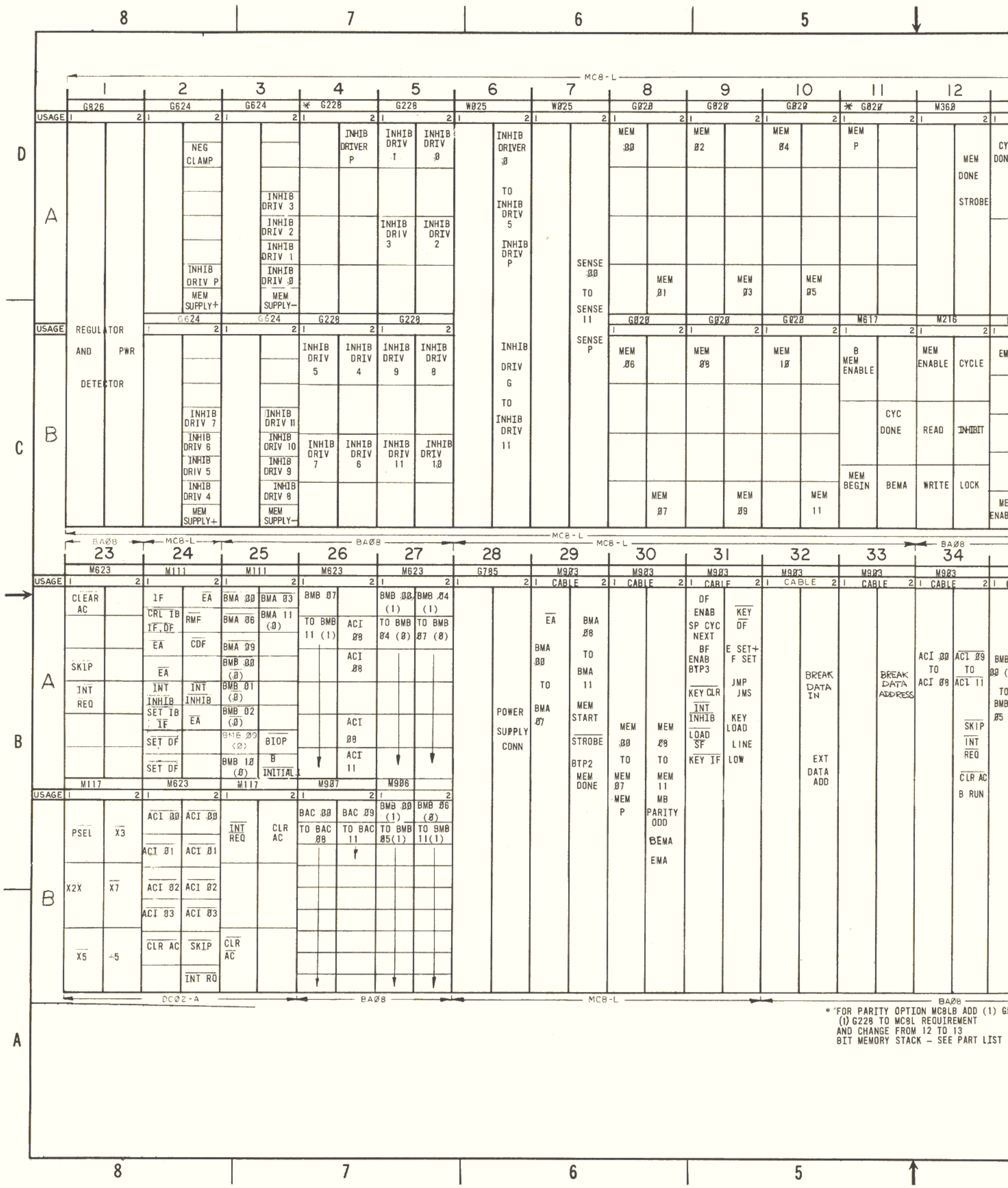
MC8-L
1 2 3 4 5 6 7 8 9 10 11 12
G826 G624 G624 * G228 G228 W025 W025 G020 G020 G020 * G020 M360
USAGE
NEG CLAMP
INHIB DRIVER P
INHIB DRIV 1
INHIB DRIV 0
INHIB DRIVER 0
TO INHIB DRIV 5
INHIB DRIV P
INHIB DRIV 3
INHIB DRIV 2
INHIB DRIV 1
INHIB DRIV 0
INHIB DRIV P
MEM SUPPLY+
MEM SUPPLY−
SENSE 00 TO SENSE 11
SENSE P
MEM 00
MEM 02
MEM 04
MEM P
MEM 01
MEM 03
MEM 05
MEM DONE
STROBE
G624 G624 G228 G228
G020 G020 G020 M617 M216
REGULATOR AND PWR DETECTOR
INHIB DRIV 5
INHIB DRIV 4
INHIB DRIV 9
INHIB DRIV 8
INHIB DRIV G TO INHIB DRIV 11
MEM 06
MEM 08
MEM 10
B MEM ENABLE
MEM ENABLE
CYCLE
INHIB DRIV 7
INHIB DRIV 6
INHIB DRIV 11
INHIB DRIV 10
INHIB DRIV 7
INHIB DRIV 6
INHIB DRIV 11
INHIB DRIV 10
CYC DONE
READ
INHIBIT
INHIB DRIV 7
INHIB DRIV 6
INHIB DRIV 5
INHIB DRIV 4
INHIB DRIV 9
INHIB DRIV 8
MEM BEGIN
BEMA
WRITE
LOCK
MEM 07
MEM 09
MEM 11
BA08 MC8-L BA08 MC8-L MC8-L BA08
23 24 25 26 27 28 29 30 31 32 33 34
M623 M111 M111 M623 M623 G785 M903 M903 M903 M903 M903 M903
CLEAR AC
SKIP
INT REQ
IF
CRL IB
IF, DF
EA
SET IB
IF
SET DF
SET DF
EA
CDF
INT INHIB
EA
BMA 00
BMA 03
BMA 06
BMA 11 (0)
BMA 09
BMB 00 (0)
BMB 01 (0)
BMB 02 (0)
BMB 09 (0)
BMB 10 (0)
BIOP
B INITIAL
BMB 07
TO BMB 11 (1)
ACI 08
ACI 08
ACI 08
ACI 11
BMB 00 (1)
TO BMB 04 (0)
BMB 04 (1)
TO BMB 07 (0)
POWER SUPPLY CONN
EA
BMA 00 TO BMA 07
BMA 08 TO BMA 11
MEM START
STROBE
BTP2
MEM DONE
MEM 00 TO MEM 07
MEM P
MEM 08 TO MEM 11
MB PARITY ODD
BEMA
EMA
DF ENAB
SP CYC NEXT
BF ENAB
BTP3
KEY CLR
INT INHIB
LOAD SF
KEY IF
KEY DF
E SET+ F SET
JMP JMS
KEY LOAD
LINE LOW
BREAK DATA IN
EXT DATA ADD
BREAK DATA ADDRESS
ACI 00 TO ACI 08
ACI 09 TO ACI 11
SKIP
INT REQ
CLR AC
B RUN
M117 M623 M117 M907 M906
PSEL X3
X2X X7
X5 ÷5
ACI 00 ACI 00
ACI 01 ACI 01
ACI 02 ACI 02
ACI 03 ACI 03
CLR AC SKIP
INT RQ
INT REQ
CLR AC
CLR AC
BAC 00 BAC 09
TO BAC 08 TO BAC 11
BMB 00 (1) BMB 06 (0)
TO BMB 05(1) TO BMB 11(1)
DC02-A BA08 MC8-L BA08
* FOR PARITY OPTION MC8LB ADD (1) G
(1) G228 TO MC8L REQUIREMENT
AND CHANGE FROM 12 TO 13
BIT MEMORY STACK – SEE PART LIST

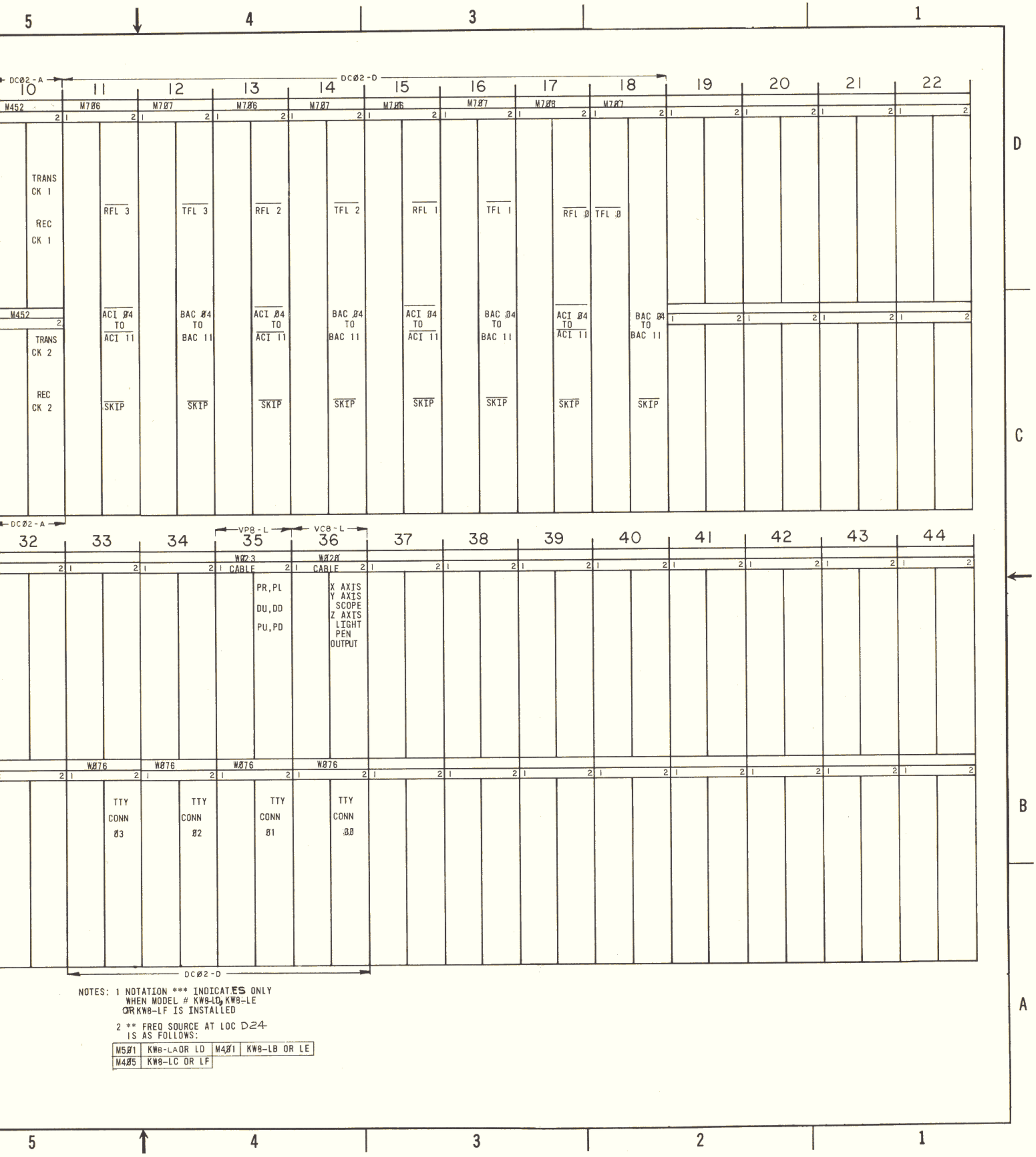

NOTES: 1 NOTATION *** INDICATES ONLY WHEN MODEL # KW8-LD, KW8-LE OR KW8-LF IS INSTALLED

2 ** FREQ SOURCE AT LOC D24 IS AS FOLLOWS:

M5Ø1	KW8-LA OR LD	M4Ø1	KW8-LB OR LE
M4Ø5	KW8-LC OR LF		

D-MU-BA08-0-4 Module Utilization BA08
Sheet 2

	1	2	3	4	5	6	7	8	9	10	11	12
	W990	G228	G221	G221	G618		G611	G221	G221	M452	M706	M707
USAGE	1 2	1 2	1 2	1 2	1 * 2	1 * 2	1 * 2	1 2	1 2	1 2	1 2	1
C	J2	X R/W SOURCE Y R/W SOURCE	Y R/W SOURCE	Y R/W SOURCE	Y R/W SOURCE X R/W RETURN	MEMORY STACK	Y R/W RETURN X R/W SOURCE	X R/W SOURCE	X R/W SOURCE	TRANS CK 1 REC CK 1	$\overline{\text{RFL 3}}$	$\overline{\text{TFL 3}}$
		G228	G221	G221				G221	G221	M452		
USAGE	1 2	1 2	1 2	1 2				1 2	1 2	1 2		
D		X R/W RETURN Y R/W RETURN	X R/W RETURN	X R/W RETURN				Y R/W RETURN	Y R/W RETURN	TRANS CK 2 REC CK 2	$\overline{\text{ACI 04}}$ TO $\overline{\text{ACI 11}}$ $\overline{\text{SKIP}}$	BAC 04 TO BAC 1 $\overline{\text{SKIP}}$

	23	24	25	26	27	28	29	30	31	32	33	34
	M623	M708	M709	M704	M701	A607	A607					
USAGE	1 2	1 2	1 *** 2	1 2	1 2	1 2	1 2	1 2	1 2	1 2	1 2	1
C	ACI 00 ACI 06 ACI 02 ACI 07 ACI 03 ACI 08 ACI 04 ACI 09 ACI 05 ACI 10 ACI 11	KW8-L OPTION CLOCK CONTROL	KW8-L OPTION CLOCK COUNTER	PR,PL DU,DD PU,PD $\overline{\text{FAST}}$ $\overline{\text{OP}}$ $\overline{\text{DONE}}$ 50 INST	Z AXIS $\overline{\text{CLEAR}}$ $\overline{\text{Y}}$ $\overline{\text{CLEAR}}$ $\overline{\text{X}}$ $\overline{\text{INITIALIZE}}$ IOT 06 IOT 07 IOT 05	TO X AXIS X0 TO X9	TO Y AXIS Y0 TO Y9					
	M002	** SEE NOTE									W076	W076
USAGE	1 2	1 2						1 2	1 2	1 2	1 2	1
D	D1 E1 H2 J2 K1 L1 N2 P2 R1 S1 U2 V2	KW8-L OPTION FREQ SOURCE		SLOW OP DONE $\overline{\text{SKIP}}$ $\overline{\text{BUS}}$ $\overline{\text{INT REQ}}$ $\overline{\text{BUS}}$ $\overline{\text{INITIALIZE}}$	$\overline{\text{INT}}$ $\overline{\text{REQ}}$ $\overline{\text{BUS}}$ $\overline{\text{SKIP}}$ $\overline{\text{BUS}}$						TTY CONN 03	TTY CONN 02

NOTES: 1 NOTATION *** IND
WHEN MODEL # KW8
OR KW8-LF IS INST

2 ** FREQ SOURCE A
IS AS FOLLOWS:

M501	KW8-LA OR LD
M405	KW8-LC OR LF

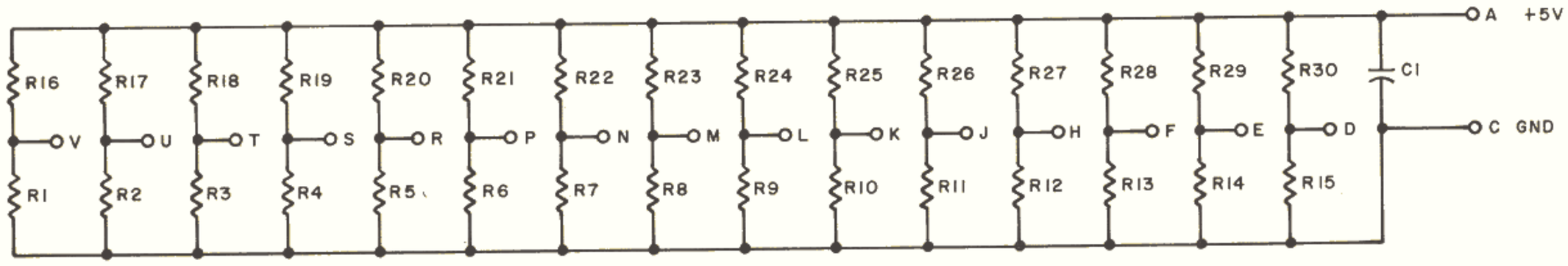

D-CS-M002-0-1 15 Loads

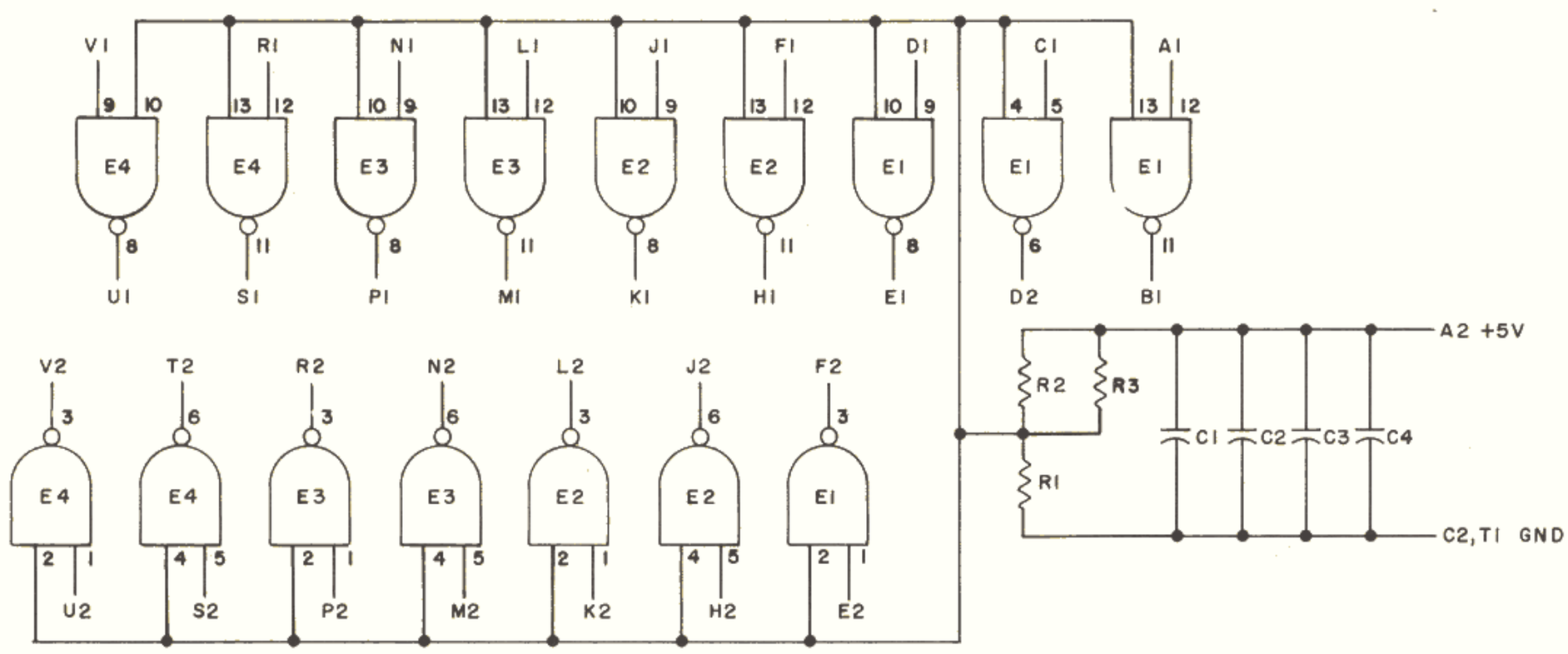

NOTES:
PIN 7 ON EACH IC = GND
PIN 14 ON EACH IC = +5V

B-CS-M111-0-1 Inverter

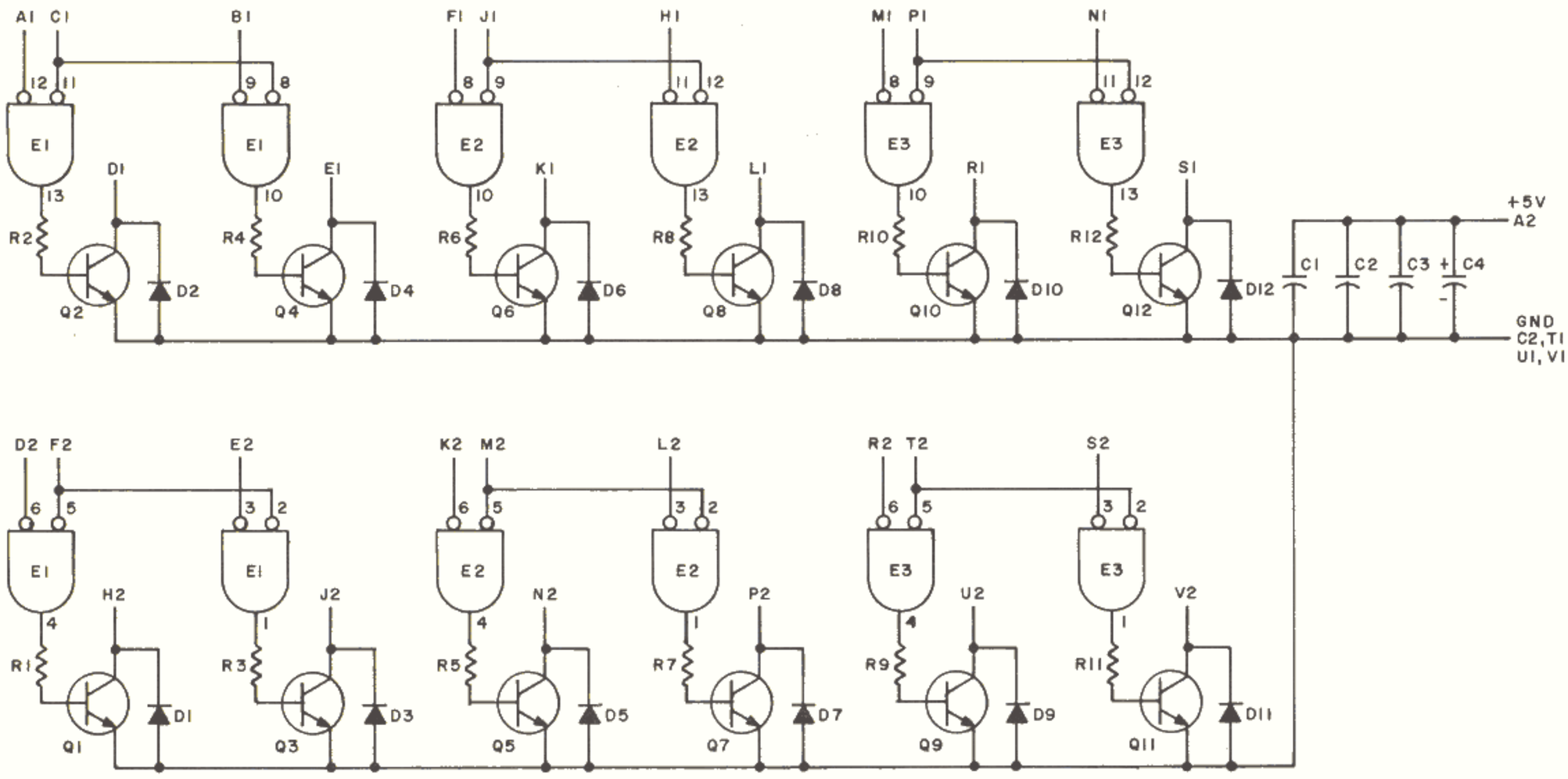

NOTES:
PIN 7 ON EACH IC = GND
PIN 14 ON EACH IC = +5V

C-CS-M623-0-1 Bus Driver

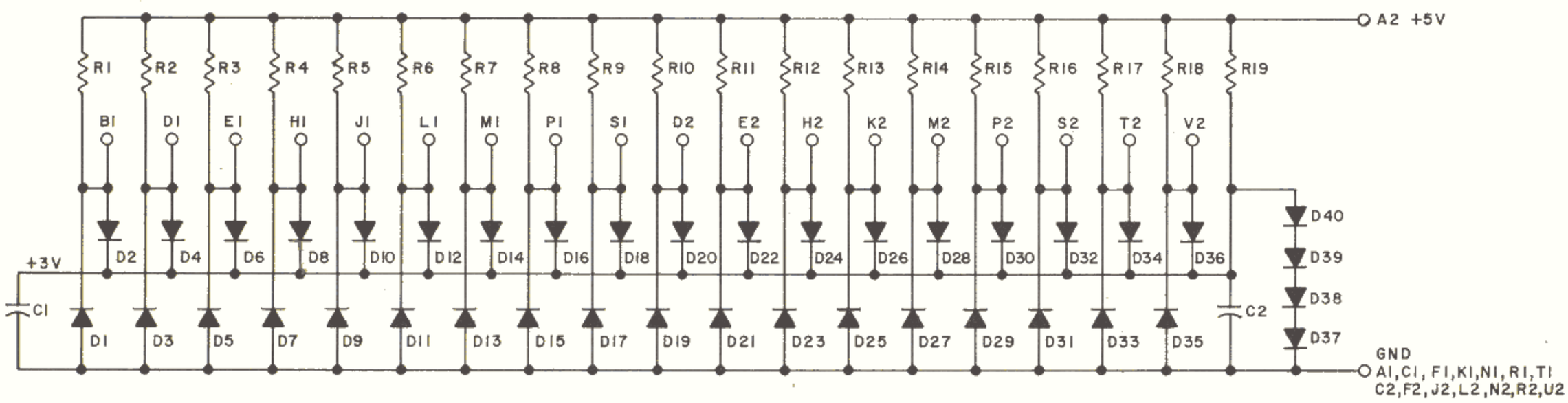

B-CS-M906-0-1 Cable Terminator

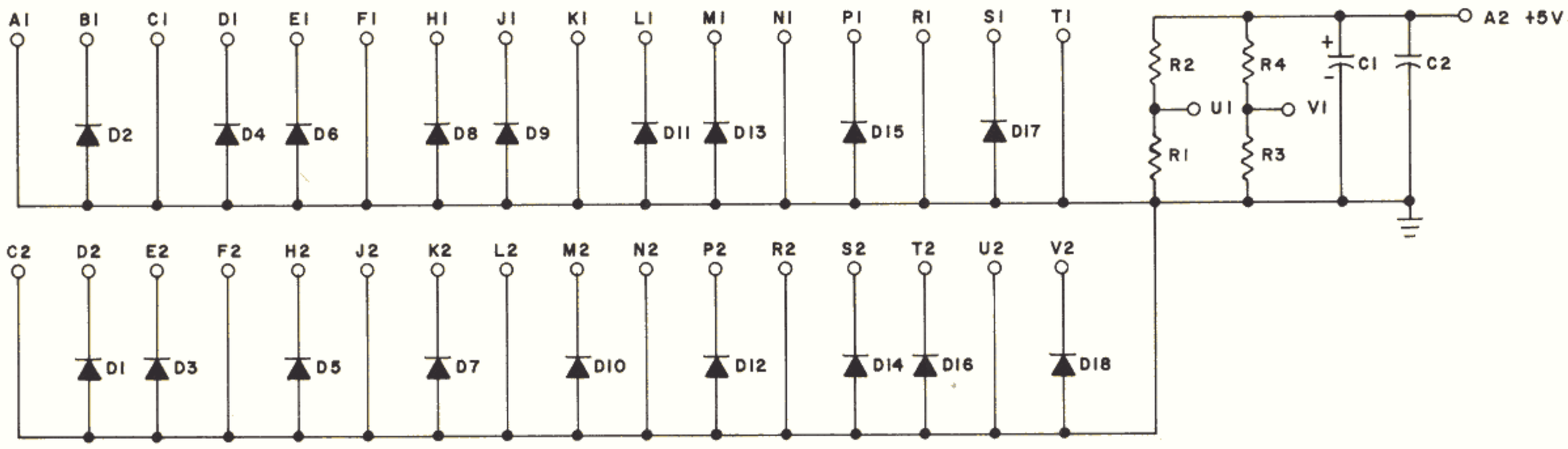

B-CS-M907-0-1 Diode Clamp