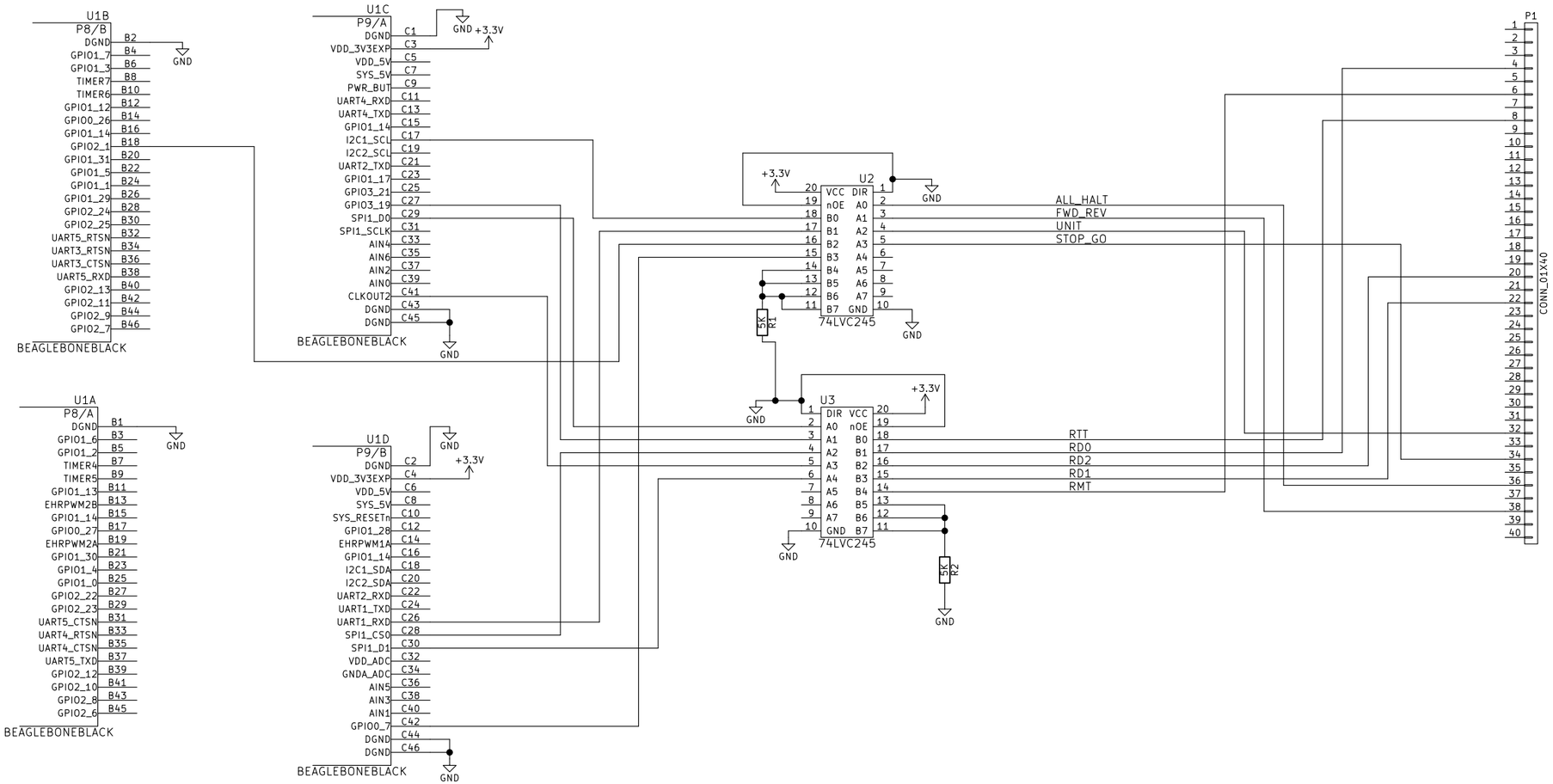

Sheet: /
File: dectape.sch

Title:

Size: B	Date:	Rev:
KiCad E.D.A. kicad (after 2015-mar-04 BZR unknown)-product		Id: 1/1